TUDA

TUDA LATHES

Series PROS, MYLER, APOC

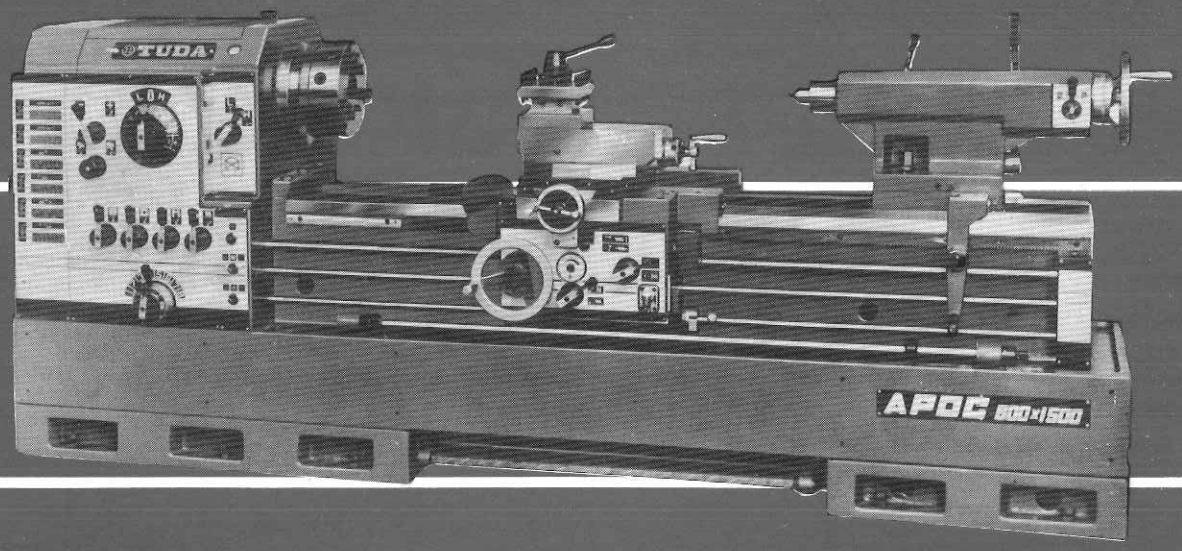

Sterling
MACHINERY EXCHANGE
www.SterlingMachinery.com

TUDA SEISAKUSHO CO., LTD.

PROS

Outstanding Features of PROS Series Lathes

- 2¼″ (58mm) Spindle bore - the largest of this class.
- Main spindle is supported by three bearings in three place - the headstock withstands any powerful cutting.
- All gears on headstock are all hardened - the grinding finish accuracy meets JIS Class O.
- The spindle speed conversion is of dial system.
- The spindle nose is of ASA-A1-6 nose.
- Automatic forced lubrication is employed to each bearing of headstock.
- Abrasive area in the bed is hardened and grinded.
- Forced oiling by means of a hand pump is adopted for lubricating abrasive area in the bed.
- Thread cutting mechanism is in Norton system.
- Drop worm type power feed lever is employed.
- Apron power feed lever and threading lever are mutually interlocked.
- The switch lever is equipped with a safety device.
- Cross slide thread is immersed in an oil bath - abrasion is minimum.
- Super precision automatic sizing device is fitted on the apron.
- Carriage is designed to withstand high speed or heavy cutting.
- Tail stock is rugged and allows stable heavy cutting.
- Equipped with foot brake - safe and efficient.
- A refined design based on human engineering - superd handiness.

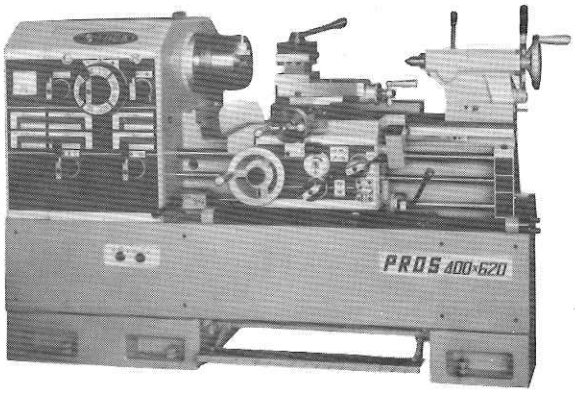

Diversification by serializing the models

In order to facilitate processing variety of products in a broad scope wherever practicable, Series PROS consist of 3 models classified by the distance between the centers ranging from 620mm～1560mm; 400×620/400×1060/400×1560.

The main spindle speeds are also grouped into 2 kinds of 75～1800rpm for high speed and 60～1500rpm for low speed. Besides also being provided with a super precision automatic sizing device, each of the series may incorporate hydraulic type profiling device (optional), taper attachment (optional), etc. to meet the user's needs.

PROS SERIES LATHE: SPECIFICATIONS

	Specifications		400×620	400×1,060	400×1,560
SWING AND DISTANCE BETWEEN CENTERS	Swing over bed		400mm (15¾″)		
	Swing over cross slide		210mm (8 9/32″)		
	Width of bed		300mm (11 13/16″)		
	Width of length		1,500mm (59 1/16″)	1,960mm (77 7/64″)	2,460mm (96 13/16″)
	Maximum distance between centers		620mm (24 13/32″)	1,060mm (41″)	1,560mm (61″)
	Height from floor surface to center		960mm (38″)		
HEAD-STOCK	Spindle bore		58mm (2¼″)		
	Taper of spindle nose		M. T. No. 6		
	Sleeve		M. T. No. 4		
	Spindle nose		ASA—A1—6		
	Number of spindle speeds		8 Steps		
	Range of Spindle speeds	Low speeds (rpm)	60～1500 : 60 · 100 · 165 · 270 · 350 · 580 · 920 · 1500		
		High speeds (rpm)	75～1800 : 75 · 125 · 200 · 330 · 420 · 700 · 1100 · 1800		
THREAD	Diameter of lead screw threading range		6mm Pitch or 4T. P. I. 32mm (1¼″)		
	Range of threading available	Metric mm	1～11 : 1 · 1.25 · 1.5 · 1.75 · 2 · 2.25 · 2.5 · 2.75 · 3 · 3.5 · 4 · (20kinds) 4.5 · 5 · 5.5 · 7 · 8 · 9 · 10 · 11		
		Whitworth T. P. I.	4～28 : 4 · 4½ · 4¾ · 5 · 5½ · 6 · 6½ · 7 · 8 · 9 · 9½ · 10 · (24kinds) 11 · 12 · 13 · 14 · 16 · 18 · 19 · 20 · 22 · 24 · 26 · 28		
		Module mm/π	1～7 : 1 · 1.25 · 1.5 · 1.75 · 2 · 2.25 · 2.5 · 3 · 3.5 · 4 · 4.5 · (14kinds) 5 · 6 · 7		
		D. P. π/inch	4～28 : 4 · 4.5 · 4.7 · 5 · 5.5 · 6 · 6.5 · 7 · 8 · 9 · 9.5 · 10 · (24kinds) 11 · 12 · 13 · 14 · 16 · 18 · 19 · 20 · 22 · 24 · 26 · 28		
FEEDS	Number of feed changes		24 kinds		
	Range of feeds	Longitudinal mm/rev	0.073～0.511 : 0.073·0.078·0.085·0.092·0.102·0.107·0.113·0.127 0.146·0.157·0.170·0.185·0.205·0.216·0.227·0.255 0.292·0.374·0.340·0.371·0.409·0.430·0.454·0.511		
		Cross mm/rev	0.036～0.256 : 0.036·0.039·0.042·0.046·0.051·0.053·0.056·0.064 0.073·0.078·0.085·0.093·0.102·0.107·0.113·0.128 0.146·0.157·0.170·0.186·0.205·0.215·0.227·0.256		
TRAVEL	Maximum cross slide travel		240mm (9 7/16″)		
	Maximum upper slide travel		130mm (5⅛″)		
	Maximum size of cutting tool		19mm×19mm (¾″×¾″)		
TAIL STOCK	Taper of center		M. T. No. 4		
	Travel of tail stock		120mm (4 23/32″)		
MAIN MOTOR	Motor output		4P 3.7 KW		

STANDARD EQUIPMENT

①Face plate	1set	(400mm·with bolt) (15¾″)
②Replacement gear (change gear)	1ea.	Gear for metric and inch lathe 30·42·50·54·55·56·60·66 (36·72·120·127) mounted on the machine.
⑥Indicator gear	1ea.	Metric lathe - 14·15 (16· mounted on the machine)
	1pc.	Inch lathe - 16
④Center sleeve	1pc.	(M. T. No. 6×M. T. No. 4)
④Carbide tipped center	2pc.	(M. T. No. 4)
③3-Jaw scroll chuck	1set	7½″ (with flange)
Tools ⑤Hexagon spanners	1set	⅜·3·4·5·6·8·10·12·14
Tools ⑦Box spanners	1set	Nominal dia. : 10
Tools ⑧One side spaneers	1set	Width : 17
Tools ⑨Both sides spanners	1set	27×30

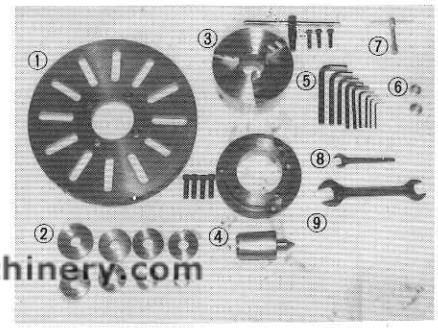

Sterling MACHINERY EXCHANGE www.SterlingMachinery.com

APOC

Outstanding Features of APOC Series Lathes

- 80mm (3″) main spindle bore-TUDA's unique three bearings in three place support system. The spindle nose is of ASA-A1-8 nose.
- Gears on headstock are all grind-finished.
- Automatic forced lubrication is employed to each bearing of headstock.
- Main spindle speed is variadle in 12 speeds by dial system.
- Hardened and ground bed.
- Abrasive area on the bed employs a forced oiling by means of a hand pump.
- Rugged bed made of mechanite cast metal (430mm wide).
- Dial system feed gear box - a broad range of feed control and 112 kinds of thread are available.
- Drop worm type automatic feed lever.
- Automatic feed and threading lever are interlocked.
- Oil bath type cross slide screw (convex thread on the carriage).
- Highly rigid tool post (also highly accurate rotary resetting).
- Powerful cutting tail stock with tongue, tail spindle drive with reduction gear.
- Equipped with foot brake - safe and efficient.
- Super precision automatic sizing device is fitted on the apron.

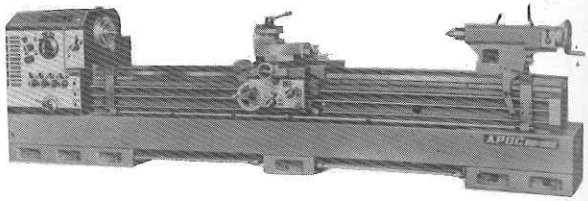

Diversification by serializing the models

In order to facilitate processing variety of product in a broad scope wherever practicable, Series APOC has a bed swing of 600mm and classified into 5 models ranging from 1500mm to 4000mm of distance between centers.
Two versions of main spindle speeds; 21～1500 rpm for high speed and 17～1200rpm for low speed, are provided. Besides being equipped with a tail stock with reduction gear and a super precision automatic sizing device, each of the unit may also incorporate a hydraulic type profiling device (optional), a taper attachment (optional), a fast feed device (optional), etc. to meet the users' needs.

APOC SERIES LATHE: SPECIFICATIONS

	Specifications			600×1500 (23⅝″×59″)	600×2000 (23⅝″×78¾″)	600×2500 (23⅝″×98⅜″)	600×3000 (23⅝″×118″)	600×4000 (23⅝″×157⅜″)
SWING AND DISTANCE BETWEEN CENTERS	Swing over bed		mm	600 (23⅝″)				
	Swing over cross slide		mm	360 (14⅛″)				
	Swing in gap		mm	790 (31″)				
	Width of gap in front of 500 mm(19⅝″) face plate		mm	280 (11″)				
	Maximum distance between centers		mm	1500(59″)	2000(78¾″)	2500(98⅜″)	3000(118″)	4000(157⅜″)
	Height from floor surface to center		mm	1027 (40⅜″)				
	Width of bed		mm	430 (16⅞″)				
	Length of bed		mm	2720(107″)	3230(127⅛″)	3740(147⅛″)	4250(167¼″)	5255(206⅞″)
HEAD-STOCK	Spindle bore		mm	80(3⅛″)				
	Taper of spindle nose		ASA	(American Standard Taper) #350				
	Spindle sleeve tapered hole		M. T.	No. 5				
	Spindle nose			ASA—A1—8				
	Number of spindle speeds			12 kinds				
	Range of spindle speeds	Low speeds	rpm	17～1200:17·23·36·55·77·120·170·230·360·550·770·1200				
		High speeds	rpm	21～1500:21·29·45·70·96·150·210·290·450·700·960·1500				
THRED	Diameter of leab screw threading range			6mm Pitch or 4T. P. I. 36mm				
	Range of threading avaiable	Metric	mm	(27kinds) 1·1.25·1.5·1.75·2·2.25·2.5·2.75·3·3.25·3.5·4·4.5·4.75·5·5.5·6·6.5·7·8·9·9.5·10·11·12·13·14				
		Whitworth	T. P. I.	(32kinds) 2·2¼·2⅜·2½·2¾·3·3¼·3½·4·4½·4¾·5·5½·6·6½·7·8·9·9½·10·11·12·13·14·16·18·19·20·22·24·26·28				
		Module	mm/π	(21kinds) 0.5·0.75·1·1.25·1.5·1.75·2·2.25·2.5·2.75·3·3.25·3.5·4·4.5·4.75·5·5.5·6·6.5·7				
		D. P.	π/inch	(32kinds) 4·4.5·4.75·5·5.5·6·6.5·7·8·9·9.5·10·11·12·13·14·16·18·19·20·22·24·26·28·32·36·38·40·44·48·52·56				
FEEDS	Range of feeds	Metric lead screw Longitudinal	mm/rev	0.090～1.253 (32kinds)				
		Metric lead screw Cross	mm/rev	0.041～0.570 (32kinds)				
		Inch lead screw Longitudinal	mm/rev	0.085～1.184 (32kinds)				
		Inch lead screw Cross	mm/rev	0.038～0.538 (32kinds)				
	Number of feed changes			32 kinds				
TRAVEL	Maximum cross slide travel		mm	330 (12⅞″)				
	Maximum upper slide travel		mm	180 (7″)				
	Maximum size of cutting tool		mm	(depth×height to center) 20(⅞″)×25(1″)				
TALL STOCK	Travel of tail stock		mm	200 (7¾″)				
	Taper of center		M. T.	No. 5				
MAIN MOTOR	Motor output		kw	7.5·4 P				

STANDARD EQUIPMENT

①3-Jaw scroll chuck		1set	10° (with flange)
②Face plate		1set	(500 mm)
③Indicator gear		1ea.	(Metric lathe: 14·15)
④Center sleeve		1pc.	(ASA #350×M. T. No. 5)
④Carbide tipped center		2pc.	(M. T. No. 5)
Tools	⑤Hexagon spanners	1set	2.5·3·4·5·6·7·10·12·14·17½ (inch)
	⑦Box spnners	1set	(Nominal dia.: 12)
	⑥Both sides spanners	1set	(Width: 13×7·19×24·30×32)

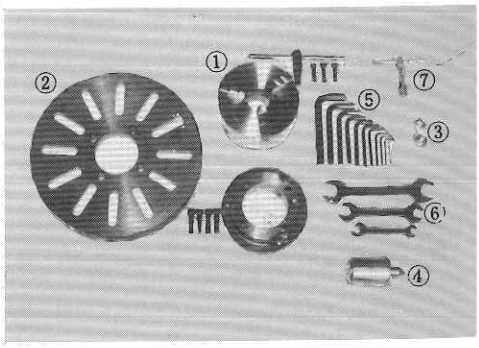

Sterling MACHINERY www.SterlingMachinery.com

EXTRA EQUIPMENT

		PROS	MYLER	APOC
①	Follow rest	10～70φ	10～100φ	10～100φ
②	Steady rest (J/1)	10～150φ	20～280φ	20～200φ
	Steady rest (J/2)	———	———	———
③	Coolant pump and system	Supplied	Supplied	Supplied
④	Taper turning attachment	Taper angle max. 20° Taper length max. 330mm	Taper angle max. 20° Taper length max. 330mm	Taper angle max. 20° Taper length max. 330mm
⑤	Carriage stop	Supplied	Supplied	Supplied
⑥	Micrometric carriage stop	Supplied →| |← 0.05mm	Supplied →| |← 0.05mm	Supplied →| |← 0.05mm
⑦	4-jaw independent chuck	Supplied	Supplied	Supplied
⑧	Driving center	M. T. No. 4	M. T. No. 4	M. T. No. 5
⑨	Hydraulic copying attachment	Supplied	Supplied	Supplied
⑩	Rear tool post	Supplied	Supplied	Supplied
⑪	Drilling attachment	M. T. No. 4	M. T. No. 4	M. T. No. 5
	Quick change tool post	Supplied	Supplied	Supplied
	Face plate	———	500φ, 600φ	600φ, 700φ
⑫	Tail stock with reduction gear	Supplied 2mm/rotation	Supplied 2mm/rotation	Standard 2mm/rotation
	Chip cover	Supplied	Supplied	Supplied
	Quick return device	———	———	Supplied 400mm/min
	3-jaw scroll chuck (Direct mount)	8″, 9″, 10″, 12″ (ASA—A1—6)	9″, 10″, 12″ (ASA—A1—6) Type Ⅰ	10″, 12″ (ASA—A1—8)
	3-jaw scroll chuck (Direct mount)	———	10″, 12″ (ASA—A1—8) Type Ⅱ	———
	3-jaw scroll chuck (with flange)	7″, 9″, 10″ (with flange)	9″, 10″, 12″ (with flange) Type Ⅰ	10″, 12″ (with flange)
	3-jaw scroll chuck (with flange)	———	10″, 12″ (with flange) Type Ⅱ	———
	4-jaw single acting chuck (Direct mount)	10″, 12″, 14″ (ASA—A1—6)	12″, 14″, 16″, 18″ (ASA-A1-6) Type Ⅰ	14″, 16″, 18″, 20″ (ASA—A1—8)
	4-jaw single acting chuck (Direct mount)	———	14″, 16″, 18″ (ASA-A1-8) Type Ⅱ	———
	4-jaw single acting chuck (with flange)	8″, 10″, 12″, 14″ (with flange)	10″, 12″, 14″, 16″, 18″ (with flange) Type Ⅰ	14″, 16″, 18″, 20″, 22″, 24″ (with flange)
	4-jaw single acting chuck (with flange)	———	14″, 16″, 18″ (with flange) Type Ⅱ	———
	Power up motor		7.5kw 4p	11kw 4p

SPECIAL SPECIFICATIONS

	Cam lock spindle nose	ASA—D1—6	ASA—D1—8	ASA—D1—8
	Spindle bore	42φ	72φ	72φ
	Taper of spindle nose	AST #200	M. T. No. 7	M. T. No. 7
	Sleeve taper	M. T. No. 4	M. T. No. 4	M. T. No. 5
	Reducible distance between centers	25mm (7/8″)	30mm (1 1/8″)	30mm (1 1/8″)

Sterling MACHINERY EXCHANGE www.SterlingMachinery.com

MYLER

Outstanding Features of MYLER Series Lathes

- Two models of special specifications having main spindle hole diameters of 58mm (2¼″) (type Ⅰ) and 80mm (3⅛″) (type Ⅱ) are provided.
- Main spindle is supported by three bearings in three place - the headstock withstands any powerful cutting.
- All gears on headstock are hardened - the grinding finish accuracy meets JIS Class O. finish
- The spindle speed conversion is of dial system.
- Type ASA-A1-6 is used for main spindle nose. (Type ASA-A1-8 is used for the version having main spindle hold diameter of 80mm (type Ⅱ.)
- Automatic forced lubrication is employed to each bearing of headstock.
- Abrasive area in the head is hardened and grinded.
- Forced oiling by means of a hand pump is adopted for lubricating abrasive area in the head.
- Thread cutting mechanism is in Norton system.
- Drop worm type power feed lever is employed.
- Apron power feed lever and threading lever are mutually interlocked.
- The switch lever is equipped with a safety device.
- Cross slide thread is immersed in an oil bath - abrasion is minimum.
- Super precision automatic sizing device is provided with apron.
- Carriage is designed to withstand high speed or heavy cutting.
- Tail stock is rugged and allows stable heavy cutting.
- Equipped with foot brake - safe and efficient.
- A refined design based on human engineering - superb handiness.

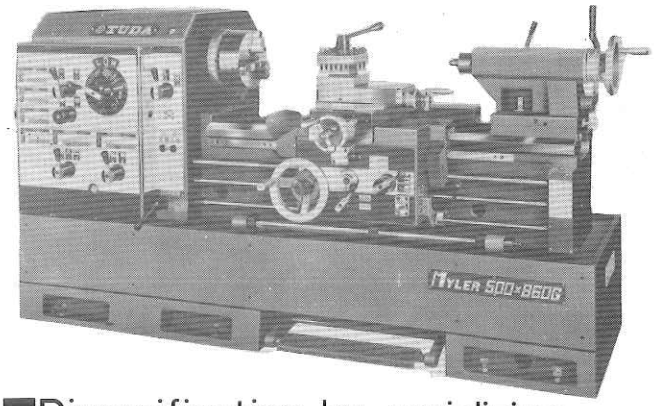

Diversification by serializing the models

In order to facilitate processing variety of products in a broad scope wherever practicable, Series MYLER consist of 2 models classified by the distance between the centers of from 860mm 2000mm. The main spindle bore are grouped into 2 kinds; 58mm bore type (type Ⅰ) and 80mm bore type (type Ⅱ, special specification).
The main spindle speeds are also grouped into 2 kinds of 25～1800rpm (12-step variable speed) for high speed and 21～1500rpm (12-step variable speed) for low speed. Besides, each of the series may incorporate a hydraulic type profiling device (optional), a taper attachment (optional), etc. to meet the user's needs.

MYLER SERIES LATHE: SPECIFICATIONS

	Specifications / Models		500×860(Ⅰ)	500×1300(Ⅰ)	500×2000(Ⅰ)	500×860(Ⅱ)	500×1300(Ⅱ)	500×2000(Ⅱ)
SWING AND DISTANCE BETWEEN CENTERS	Swing over bed		500mm (19⅝″)					
	Swing over cross slide		270mm (10⅝″)					
	Swing in gap		700mm (27½″)					
	Width of gap in front of face plate		230mm (9 1/16″)					
	Maximum distance between centers		860mm (33⅞″)	1300mm (51⅛″)	2000mm (78¾″)	860mm	1300mm	2000mm
	Height from floor surface to center		1000mm (39⅜″)					
	Width of bed		400mm (15¾″)					
	Length of bed		2010mm (79⅛″)	2460mm (96⅞″)	3160mm (124⅜″)	2010mm	2460mm	3160mm
HEAD-STOCK	Spindle bore		58mm (2¼″)			80mm (3⅛″)		
	Taper of spindle nose		M. T. No. 6			A S A #350		
	Spindle sleeve tapered hole		M. T. No. 4					
	Spindle nose		ASA-A1-6			ASA-A1-8		
	Number of spindle speeds		12 steps					
	Range of spindle speeds	Low speeds (rpm)	21 · 29 · 45 · 70 · 96 · 150 · 210 · 290 · 450 · 700 · 960 · 1500					
		High speeds (rpm)	25 · 35 · 55 · 85 · 120 · 180 · 250 · 350 · 550 · 850 · 1200 · 1800					
THREAD	Diameter of lead screw threading range		6mm Pitch or 4T. P. I. 36mm (1 13/32″)					
	Range of threading available	Metric mm	(20kinds) 1 · 1.25 · 1.5 · 1.75 · 2 · 2.25 · 2.5 · 2.75 · 3 · 3.5 · 4 · 4.5 · 5 · 5.5 · 6 · 7 · 8 · 9 · 10 · 11					
		Whitworth T. P. I.	(24kinds) 4 · 4½ · 4¾ · 5 · 5½ · 6 · 6½ · 7 · 8 · 9 · 9½ · 10 · 11 · 12 · 13 · 14 · 16 · 18 · 19 · 20 · 22 · 24 · 26 · 28					
		Module mm/π	(16kinds) 1 · 1.25 · 1.5 · 1.75 · 2 · 2.25 · 2.5 · 2.75 · 3 · 3.5 · 4 · 4.5 · 5 · 5.5 · 6 · 7					
		D. P. π/inch	(24kinds) 4 · 4.5 · 4.75 · 5 · 5.5 · 6 · 6.5 · 7 · 8 · 9 · 9.5 · 10 · 11 · 12 · 13 · 14 · 16 · 18 · 19 · 20 · 22 · 24 · 26 · 28					
FEEDS	Range of feeds	Longitudinal mm/rev	(24kinds) 0.085～0.592mm/rev					
		Cross mm/rev	(24kinds) 0.038～0.269mm/rev					
	Number of feed changes		24 kinds					
TRAVEL	Maximum cross slide travel		290mm (11⅜″)					
	Maximum size of cutting tool		(depth×height to center) 25mm×26mm (1″×1″)					
TAIL STOCK	Travel of tail stock		150mm (6″)					
	Taper of center		M. T. No. 4					
MAIN			5.5KW 4P					

STANDARD EQUIPMENT

			500×860 500×1300(type Ⅰ) 500×2000	500×860 500×1300(type Ⅱ) 500×2000
①3-Jaw scroll chuck		1set	Optional (ASA-A1-6) 9″(230mm)	General purpose (Flange, with mounting bolt) 10″(273mm)
②Face plate		1set	(with mounting bolt) 400mm	
③Replacement gear (change gear)		1ea.	(only 110 sunplied 2 pcs.) 50·70·90·100·110·120·127 (4 pcs. are mounted on the machine)	
④Indicator gear		1ea.	Metric lathe: 14·15. (16 mounted on the machine)	
		1pc.	Inch lathe: 16	
⑤Center sleeve		1pc.	M. T. No. 6× M. T. No. 4	ASA#350× M. T. No. 4
⑤Carbide tipped center		2pc.	M. T. No. 4	
Tools	⑥Hexagon spanners	1ea.	2.5·3·4·5·6·10·12·14·17.⅜	2.5·3·4·5·6·8 10·12·14·17.½
	⑦Box spanners	1pc.	Nominal dia.: 12	
	⑧Both sides spanners	1ea.	Width: 13×7·19×24·30×32	

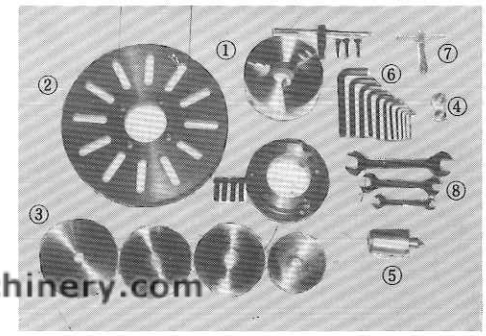

Sterling MACHINERY EXCHANGE www.SterlingMachinery.com

PROS

400×620
(15¾″) (24 13/32″)
×1060
(41″)
×1560
(61″)

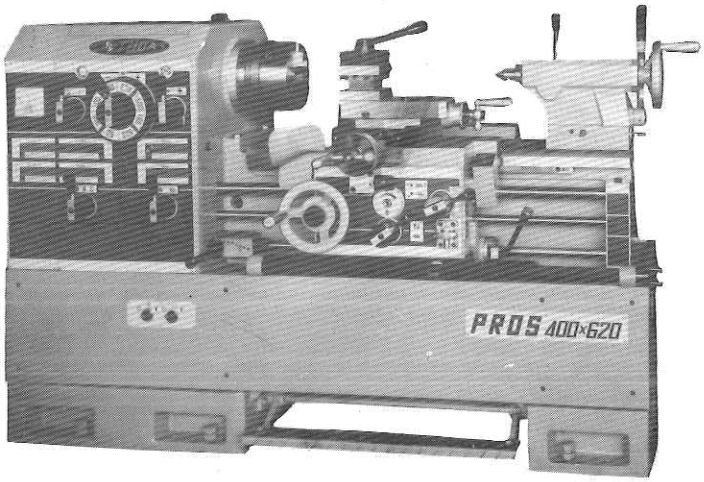

MYLER

500×860
(19⅝″) (33⅞″)
×1300
(51⅛″)
×2000
(8¾″)

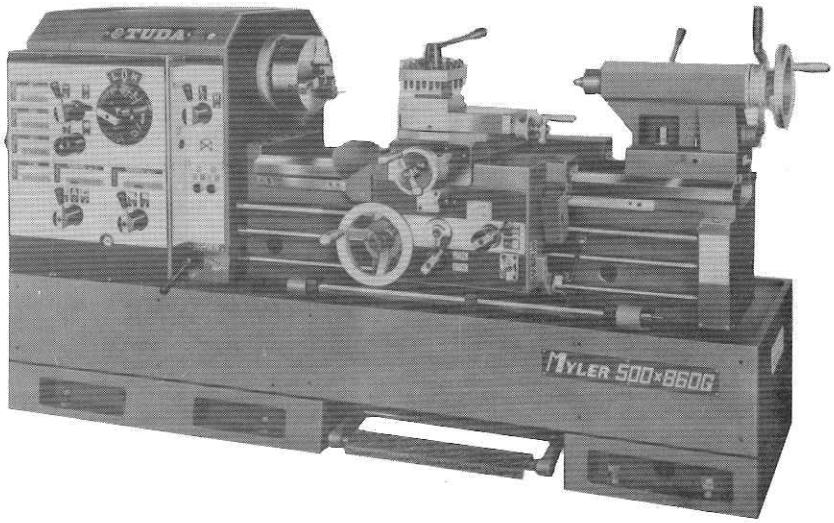

APOC

600×1500
(23⅝″) (59″)
×2000
(78¾″)
×2500
(98⅜″)
×3000
(118″)
×4000
(157⅜″)

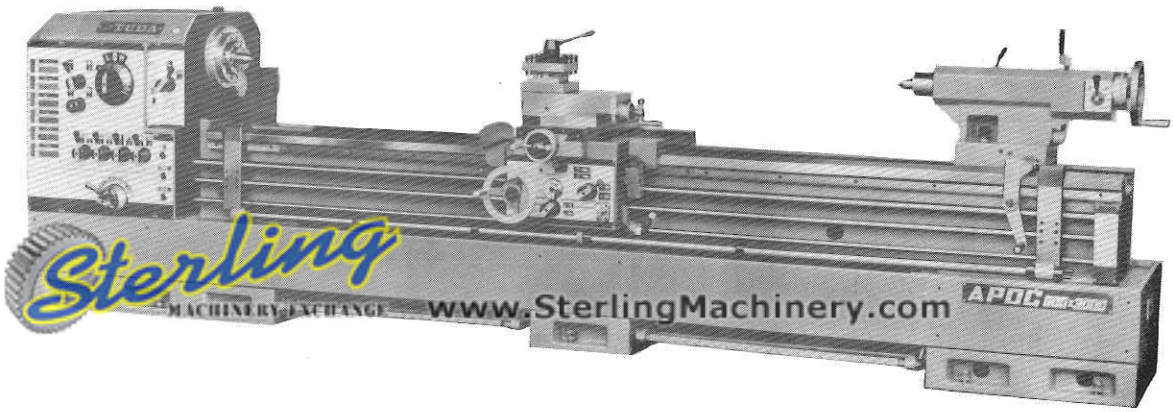

Sterling
MACHINERY EXCHANGE
www.SterlingMachinery.com

EXTRA EQUIPMENT

①

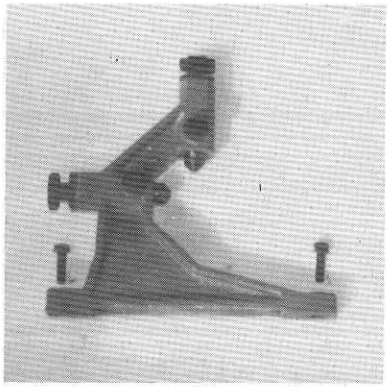

Follow rest

②

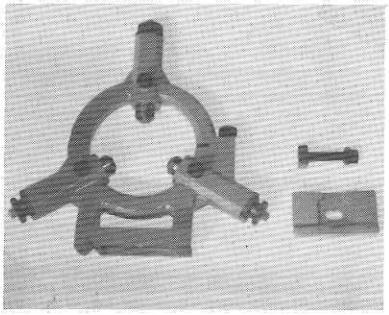

Steady rest

③

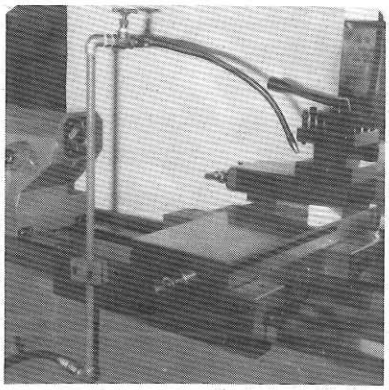

Coolant pump and system

④

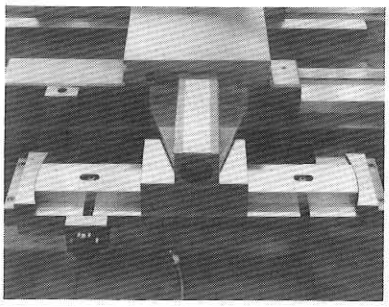

Taper turning attachment

⑤

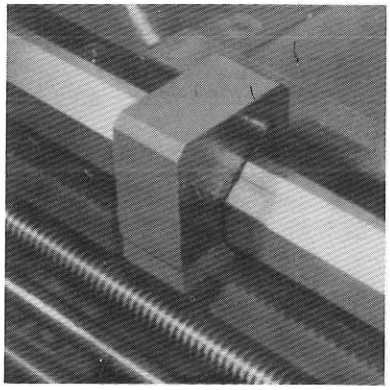

Carriage stop

⑥

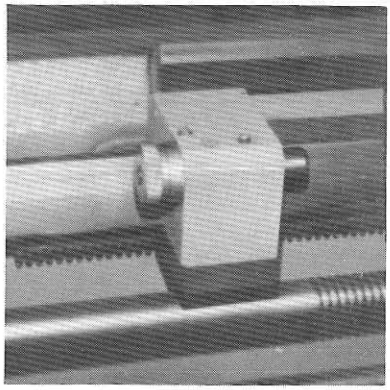

Micrometric carriage stop

⑦

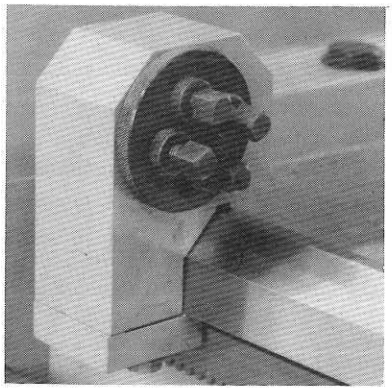

4—jaw independent chuck

⑧

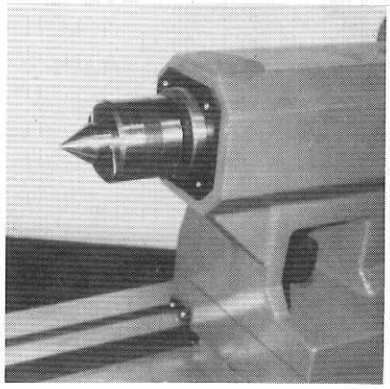

Driving center

⑨

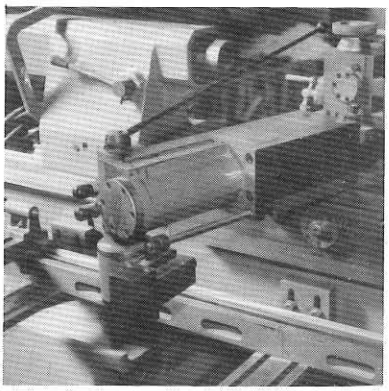

Hydraulic copying attachment

⑩

⑪

⑫

Sterling MACHINERY EXCHANGE www.SterlingMachinery.com

TUDA'S LATHES—Competent and Energy Saving

■SERIES JUMBO

JUMBO EIGHT MIDDLE SIZE POWEREUL LATHES (4 models)

- 810×2,000/3,000/4,000/5,000

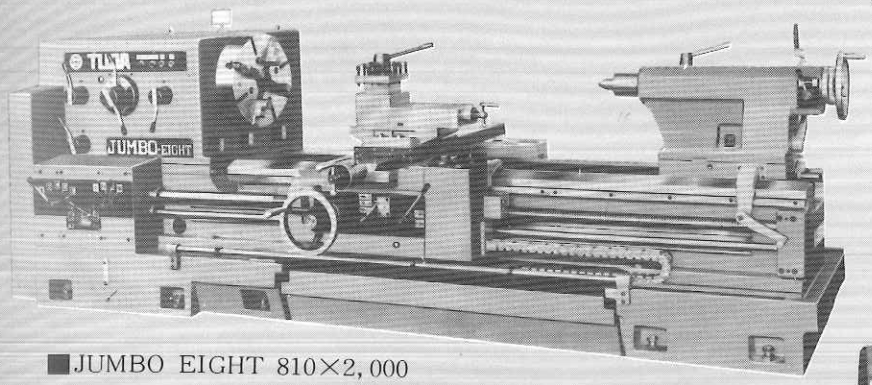

■JUMBO EIGHT 810×2,000

Tuda Seisakusho Company, Ltd. pursues and develops new products and new technologies under a policy of always providing with the lathes those are consistent with the needs of the market.
We always listen to the market and coincide our development with it.
Tuda Seisakusho Company, Ltd. uninterruptedly pursues various problems attached to the lathes such as "high-speed orientation and improvement of per-ormance" or "stengthening secular resi-stivity" purely on the standpoint of users. Taking an example with bed guide surface alone, various tests are perpetually repeated day and night on the nature of materials, processing those materials, shaping and machining, etc.

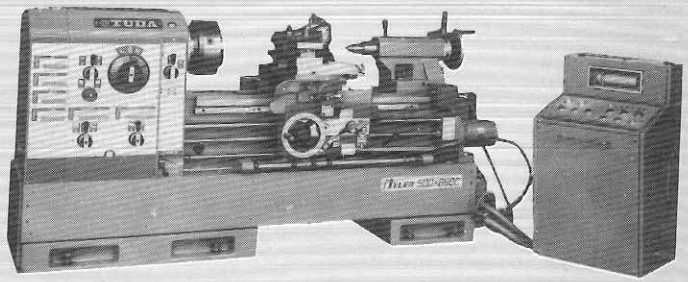

■MYLER POWERFUL MULTI-CYCLE AUTOMATIC PROFILING LATHE

■SERIES TFL FACE LATHES

LARGE SIZE POWERFUL LATHES (8 models)

- 1,200×1,00/1,500/2,000
- 1,600×1,200/1,750/2,650/3,500/4,000

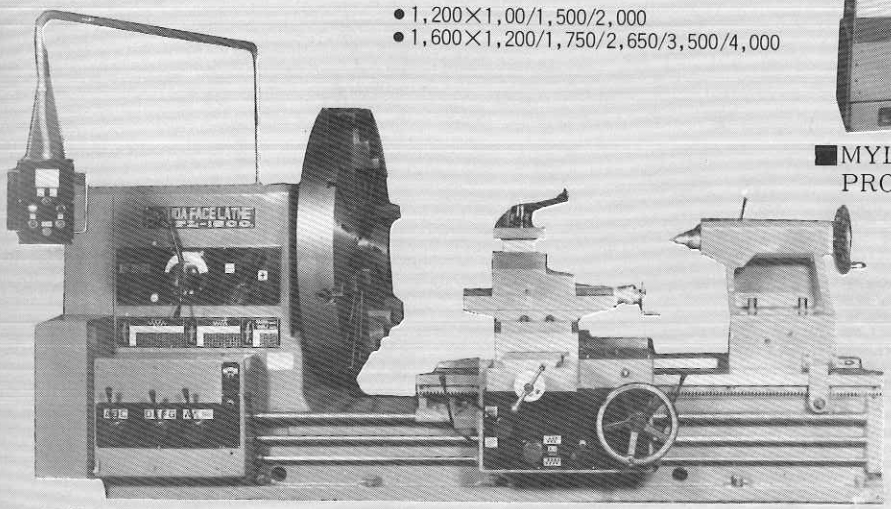

■JUMBO 1,000×3,000

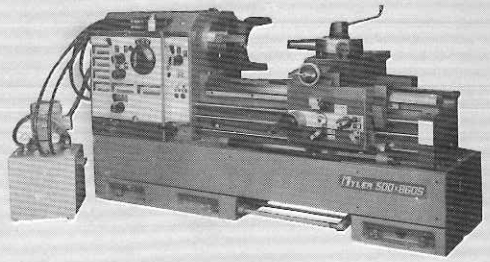

■VELVE THREAD CUTTING LATHE

■SERIES TBL

ULTRA LARGE POWERFUL LATHES (18 models)

- 1,600×1,000/1,500/2,000/3,000/4,000/5,000 6,000/7,000/8,000/10,000/11,000
- 2,100×1,000/1,500/2,000/3,000/4,000/5,000 6,000/7,000/8,000/10,000/11,000

SERIES TBL ULTRA LARGE SIZE POWERFUL LATHES WITH ELECTRONICALLY CONTROLLED SECONDARY COPYING DEVICE

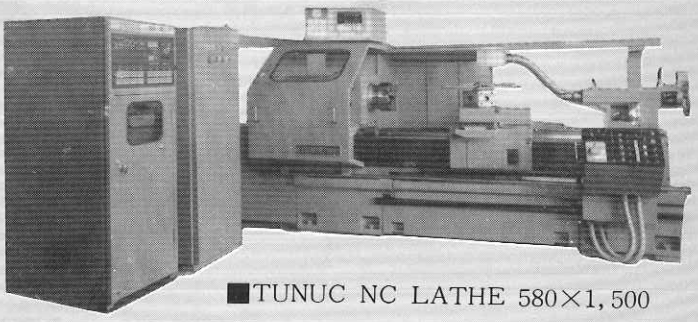

■TUNUC NC LATHE 580×1,500

■SERIES TBL ULTRA LARGE SIZE LATHE WITH ELECTRONICALLY CONTROLLED SECONDARY COPYING DEVICE

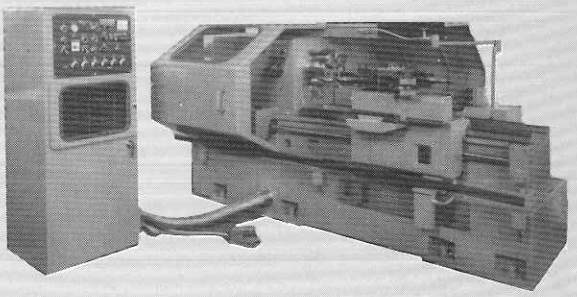

■PCL Model 580 PROCON LATHE

Sterling MACHINERY EXCHANGE www.SterlingMachinery.com

TUDA SEISAKUSHO CO., LTD.

MAIN PLANT ; 59, Iehisa-cho, Takefu-City, Fukui Pref., JAPAN PHONE : TAKEFU (0778)23-2323 TELEX : 5175-569
Tokyo Business Place; Taiyo Bldg, 5F, No.3-27, Sakuma-cho, Kanda, Chiyoda-ku, Tokyo TEL;(03)851-9206
Osaka Business Plsce; Harada Bldg 2F No.55-5Chome, Kitahorie-dori, Nishi-ku Osaka-City TEL;(06)532-0735
Nagoya Business Place; Denki Bldg, Sotodoi-Cho 1, Atsuta-ku, Nagoya-City